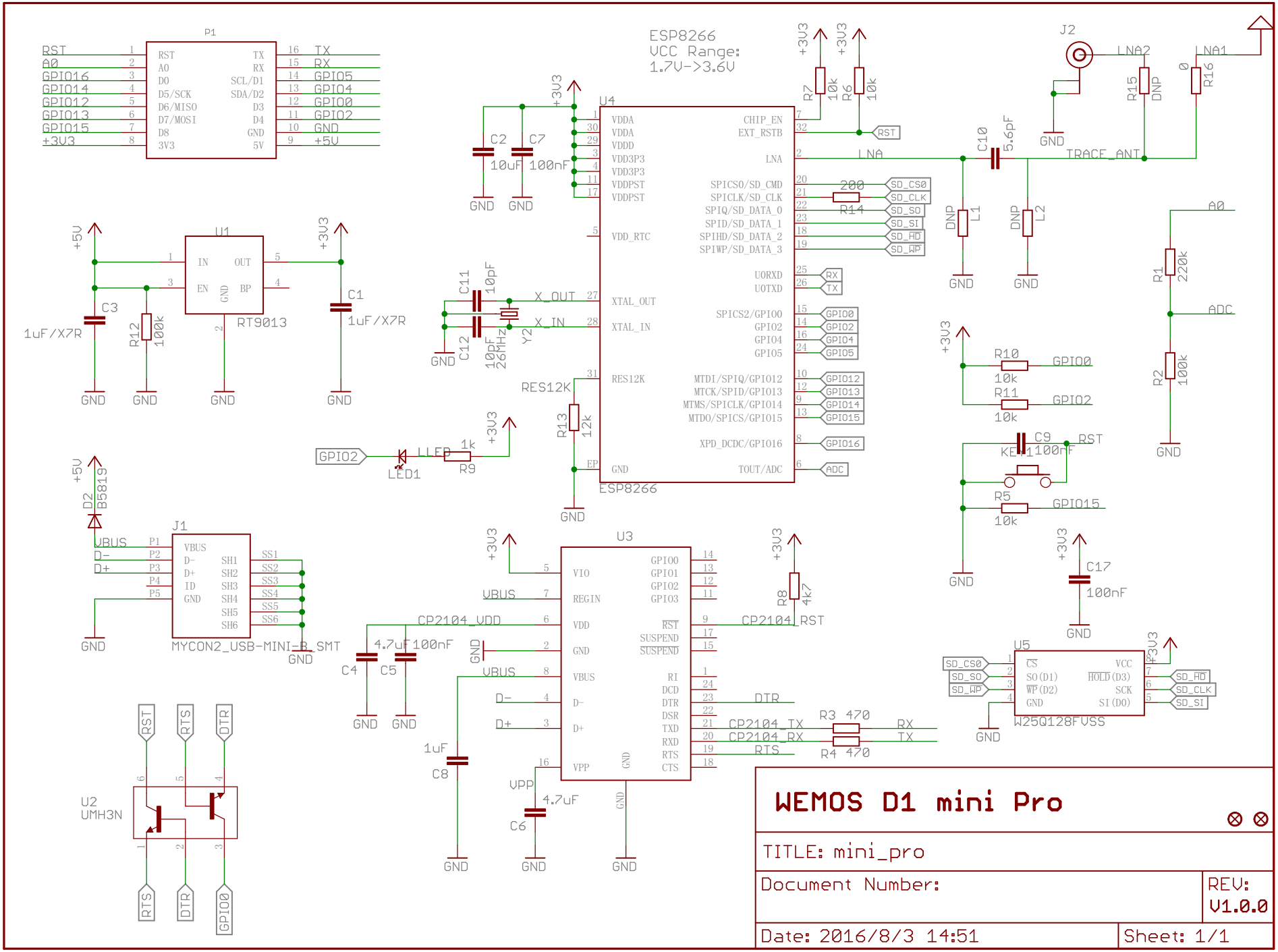
ESP8266
VCC Range:
1.7V->3.6V
P1
RST
A0
GPIO16
GPIO14
GPIO12
GPIO13
GPIO15
+3V3
TX
RX
GPIO5
GPIO4
GPIO0
GPIO2
GND
+5V
U1
RT9013
C1
1uF/X7R
C3
1uF/X7R
R12
100k
U4
ESP8266
VDDA
VDDD
VDD3P3
VDDPST
VDD_RTC
XTAL_OUT
XTAL_IN
RES12K
CHIP_EN
EXT_RSTB
LNA
SPICS0/SD_CMD
SPICLK/SD_CLK
SPIQ/SD_DATA_0
SPID/SD_DATA_1
SPIHD/SD_DATA_2
SPIWP/SD_DATA_3
U0RXD
U0TXD
SPICS2/GPIO0
GPIO2
GPIO4
GPIO5
MTDI/SPIQ/GPIO12
MTCK/SPID/GPIO13
MTMS/SPICLK/GPIO14
MTDO/SPICS/GPIO15
XPD_DCDC/GPIO16
TOUT/ADC
C2
10uF
C7
100nF
C11
10pF
C12
10pF
Y2
26MHz
X_OUT
X_IN
R13
12k
R14
200
R7
10k
R6
10k
J2
LNA2
LNA1
R15
DNP
R16
0
C10
5.6pF
TRACE_ANT
L1
L2
R1
220k
R2
100k
ADC
A0
R10
10k
GPIO0
R11
10k
GPIO2
C9
100nF
RST
KEY
R5
10k
GPIO15
C17
100nF
GPIO2
LED1
R9
1k
D2
B5819
J1
MYCON2_USB-MINI-B_SMT
VBUS
D-
D+
ID
GND
SS1
SS2
SS3
SS4
SS5
SS6
U3
VIO
REGIN
VDD
GND
VBUS
D-
D+
VPP
GPIO0
GPIO1
GPIO2
GPIO3
RST
SUSPEND
RI
DCD
DTR
DSR
TXD
RXD
RTS
CTS
CP2104_VDD
CP2104_RST
R8
4k7
C4
4.7uF
C5
100nF
C8
1uF
C6
4.7uF
DTR
CP2104_TX
CP2104_RX
RTS
R3 470
R4 470
RX
TX
U5
W25Q128FVSS
CS
SO(D1)
WP(D2)
GND
VCC
HOLD(D3)
SCK
SI(D0)
SD_CS0
SD_SO
SD_WP
SD_HD
SD_CLK
SD_SI
U2
UMH3N
RST
RTS
DTR
GPIO0
WEMOS D1 mini Pro
TITLE: mini_pro
Document Number:
REV:
V1.0.0
Date: 2016/8/3 14:51
Sheet: 1/1